Wall mounted RGB/W 0/1-10V Controller

09.2811V.04142

Important: *Read All Instructions Prior to Installation*

Function introduction

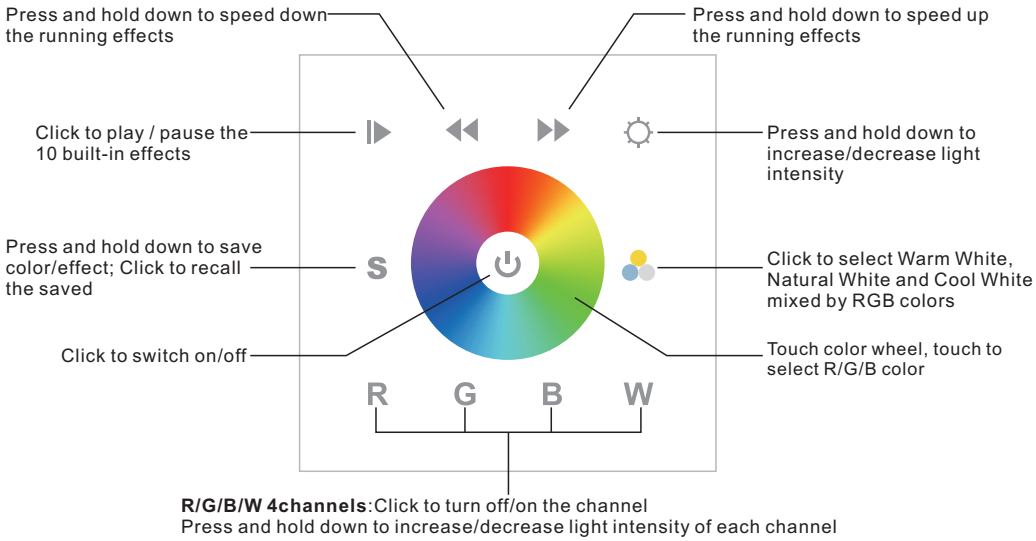

Front side

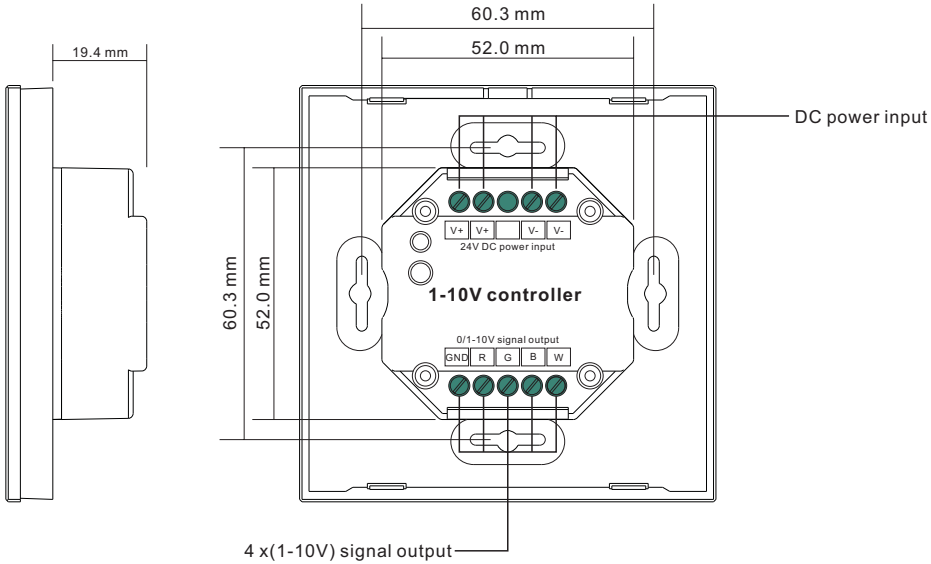

Back side

Product Data

Power Supply	24VDC
Power consumption	< 20 mA
Output Signal	4x(1-10V)
Output Current	Max. 20 mA
Operating temperature	0-40°C
Relative humidity	8% to 80%
Dimensions	86x86x29.1mm

- Touch sensitive
- Glass interface(white & black)
- 4 channels 1-10V Signal output
- Control RGBW color
- Waterproof grade: IP20
- 0-10V version for chosen

Safety & Warnings

- DO NOT install with power applied to device.
- DO NOT expose the device to moisture.

Wiring diagram

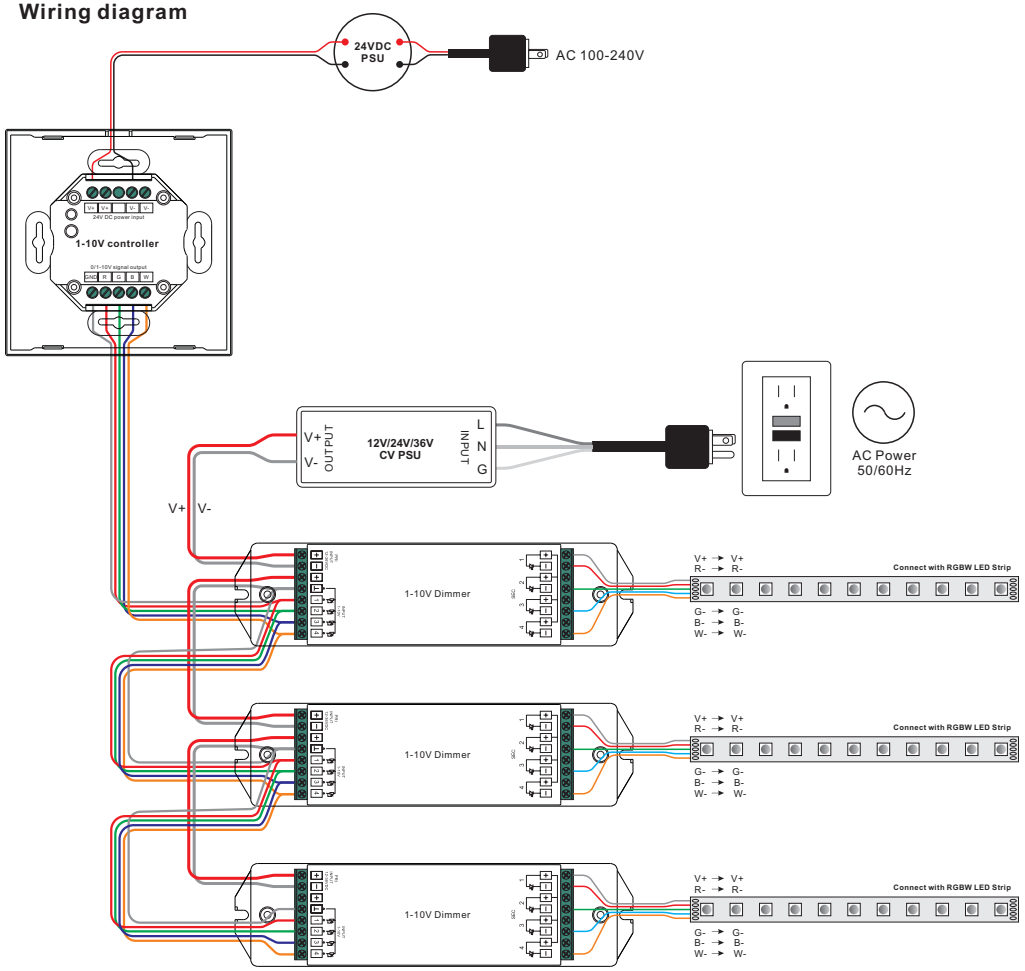
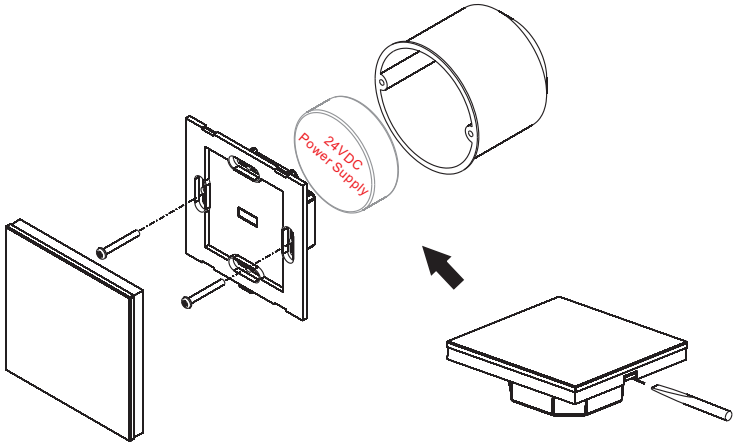
Installation